Tolomatic
EXCELLENCE *IN MOTION*®

ServoChoke®

ELECTRIC CHOKE VALVE ACTUATOR

ENDURANCE TECHNOLOGY℠

Patent Pending

LINEAR SOLUTIONS MADE EASY

ServoChoke® Electric Choke Valve Actuator

THE PERFECT ELECTRIC ACTUATOR FOR ALL CHOKE VALVE APPLICATIONS

ServoChoke® provides greater reliability, precision and speeds for performance drilling applications vs conventional hydraulic or electric choke valve actuators. ServoChoke SVC was designed specifically for **Managed Pressure Drilling (MPD), Set-point choke control and Choke & Kill for well control applications.**

It's fit for purpose design not only provides a rugged and reliable integrated package for drilling some of the most challenging formations in the harshest environments on the planet but can also save time and money while drilling. Shaving seconds off each connection can mean thousands of dollars per year in savings. Even avoiding one incident of stuck pipe, whether for just a few hours or even a day to clear, decreases NPT time, increases ROP and overall drilling efficiency.

Designed for Continuous Duty Operation

No Maintenance + **High Performance** = **Improved Pressure Control** → **REDUCED NPT/ Increased Up Time**

Patent Pending

TOLOMATIC'S SERVOCHOKE SOLUTION PROVIDES SUPERIOR PERFORMANCE FOR ALL CHOKE VALVE APPLICATIONS

Advantages of ServoChoke for Managed Pressure Drilling

FEATURE	BENEFIT
Speeds as high as 19.6 mm/sec (0.77"/sec) at full force	• Save time and money on reduced ramp and connection times • Full open to full close (51mm/2" travel) in less than 3.5 seconds • 3 mm (0.125") adjustments happen in less than 0.5 second
Programmable/Full Motion Profile Control	• Adjustments executed from host controller can be triggered by down-hole events or operator intervention • Controlled accel/decel can reduce or eliminate gate/seat damage due to "valve slap" • High performance control system allows the electric actuator to respond in milliseconds
Positional repeatability to within 0.08% of span or better	• Better precision means better pressure control to help avoid NPT time from stuck pipe or kicks • Repeatability maintained throughout designed service life • Based on 51mm (2") of valve travel
Globally certified: CID1 • ATEX •IECEx	• Worry-free performance in the most hazardous environments • Tested & certified for ATEX Zone 1, IECEx Zone 1, & Class I Div 1 for global deployment
Temperature range: -40° to +60°C (-40° to +140° F)	• No winterizing or cooling equipment required • Consistent performance across wide range of temperatures • No cold weather start-up issues
Planetary roller screw for long life and no maintenance	• No adjustments required to maintain precision • Reduced down time • No fluids or filters to change • No maintenance
Fully integrated motor/actuator/feedback in a single sealed housing	• Electrical connections are made in one location to simplify rig up and rig down • Sealed to prevent ingress of fluids or other contaminants • No peripheral components to add/remove or replace • Rugged construction for deployment anywhere

ServoChoke® Electric Choke Valve Actuator

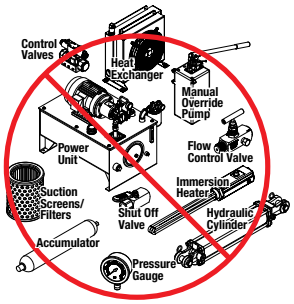

WHY ELECTRIC SYSTEMS ARE SUPERIOR TO HYDRAULIC SYSTEMS FOR CONTROL OF CHOKE VALVES

	HYDRAULIC CHALLENGE	ServoChoke® SOLUTION
Motion Control	Fluctuating speeds and position sometimes require frequent valve adjustments. This adds to down time and can require expensive complex peripheral equipment to correct.	Motion control systems are designed to self-compensate – position, speed, acceleration (deceleration) and force are precisely controlled and fully programmable.
Setup	Complex and/or long set-up of hydraulic systems to connect hoses, wire and set-up peripheral sensors or equipment. Filling and purging these systems is time consuming and requires continual monitoring to prevent failure.	Simple setup with only one power cable and one feedback cable. No maintenance required – lubricated for life, no fluids or filters to change.
Mainten-ance	In order to maintain peak precision, periodic adjustment of the backlash between the gear and screw is necessary. Lubrication of these two components is also required by the manufacturers.	High precision automation grade components do not require mechanical adjustment to maintain peak repeatability. Performance will remain consistent from initial deployment to the end of it's useful service life.

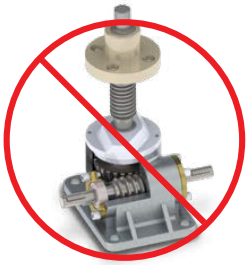

WHY ELECTRIC SYSTEMS ARE SUPERIOR TO HYBRID SYSTEMS FOR CONTROL OF CHOKE VALVES

	HYBRID CHALLENGE	ServoChoke® SOLUTION
Life	Jack screws are designed for duty cycles of approximately 40% or less. Exceeding this duty cycle will increase the rate of wear between the drive gear and screw thus increasing the backlash.	All ServoChoke components are designed and intended for continuous duty operation. Service life of the unit can be predicted using industry standard B10/L10 calculations as hardened-steel power transmission components are used.
Mainten-ance	In order to maintain peak precision, periodic adjustment of the backlash between the gear and screw is necessary. Lubrication of these two components is also required by the manufacturers.	ServoChoke's high-precision, automation-grade components do not require mechanical adjustment to maintain peak repeatability. Performance will remain consistent from initial deployment to end of service life.
Obsolescence	Multiple components must be individually sourced and assembled together. These parts are from multiple vendors and carry individual certifications where applicable. Component obsolescence can impact assembly availability and require additional testing and validation of new components to ensure equivalent performance.	The entire ServoChoke assembly is certified allowing standard components to be designed in and sourced from a single supplier to eliminate disruptions in the supply chain and ensure consistent performance.
Speed	To achieve force and life requirements, high gear reductions and increased mechanical inefficiencies are required which can limit the linear velocity of the gate and allow the unit to be self locking for choke operations.	ServoChoke's high-efficiency design reduces the amount of mechanical reduction. This allows full utilization of a servo motor's RPM range resulting in a 20-80% increase in speed and utilizes a industry standard failsafe brake to reliable hold the actuator in place during power loss conditions .
Precision	Minimum backlash in a jackscrew assembly is normally 0.051mm (0.002"). This value will increase with time and wear.	ServoChoke replaces the conventional jack screw with a precision-hardened planetary roller screw, reducing backlash to less than 0.025mm (0.001"). This precision is maintained throughout the usable service life of the actuator and life can be predicted using industry standard L10 life calculations.

ServoChoke® ELECTRIC CHOKE VALVE ACTUATOR

ENDURANCE TECHNOLOGY℠

Endurance Technology features are designed for maximum durability to provide extended service life.

ServoChoke is a high performance linear integrated actuator designed to meet the rigorous needs of the oil and gas industry. With global certifications, an all steel NACE MR0175 compliant body and a temperature range of -40°C to +60°C, ServoChoke is capable of providing reliable, fast, and precise positioning. The brushless servo motor, absolute encoder, and roller screw drivetrain ensure the availability and reliability needed. Below are some of the unique design aspects of the SVC that make it the ideal solution for every choke valve application.

LIFTING RING

- Conveniently located for use with lift equipment

ALL STEEL BODY DESIGN

- Conforms to NACE MR0175
- Zinc plated or painted

HIGH POSITIONAL REPEATABILITY

± 0.00075" *± 0.0191mm*

INTEGRAL MOUNTING

- Provides ease of integration with the valve
- ISO F16 and ISO F25 mounts for added flexibility
- Through holes for face mounting options

REPLACEABLE WIPER/SCRAPER

- Prevents contaminants from entering the housing for extended life of the actuator

THRUST TUBE

- High strength stainless steel thrust tube supports extremely high force capabilities
- Excellent corrosion resistance and surface hardness

THREADED ROD END

- Allows for custom rod connections for the valve stem

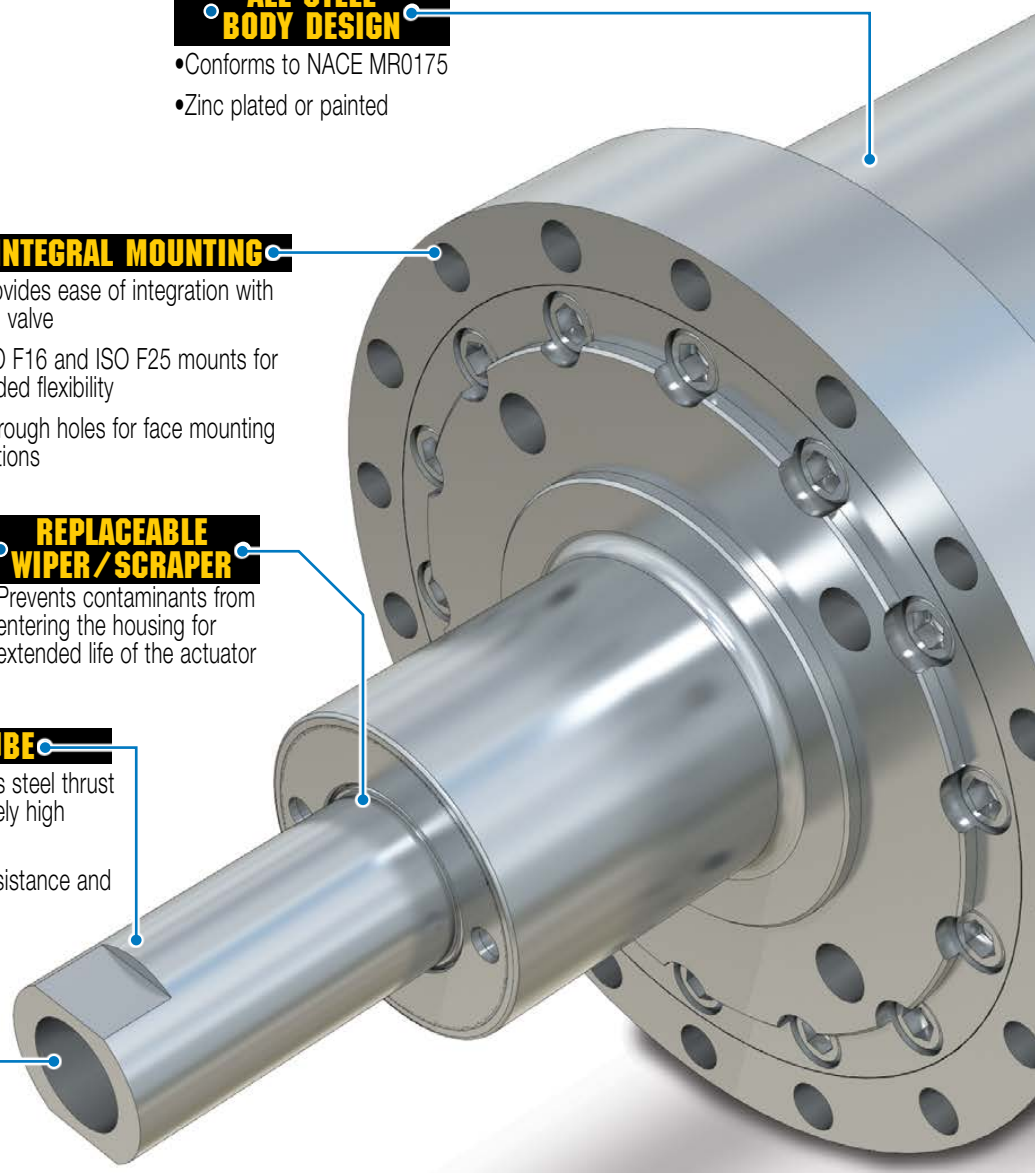

Tolomatic EXCELLENCE IN MOTION ... MAXIMUM DURABILITY

SIMPLE TO CONNECT

MOTOR & FEEDBACK

- 1.2m (48") Flying leads with 3/4 NPT threads for conduit connections

GROUNDING LUG

- Conveniently located, stainless steel for corrosion resistance

MANUAL OVERRIDE

- Provides mechanical method to extend and retract the thrust rod in power off situations

HIGH RESOLUTION FEEDBACK

- Multi-turn absolute encoder
- Hiperface & SSI Sin/Cos protocols available

ROLLER SCREW TECHNOLOGY

- Long life
- High repeatability
- Compact design

SMOOTH BODY DESIGN

- Eliminates potential contaminant collection points

HAZARDOUS LOCATION RATED

CE Ex II 2 G Ex db IIB T4 Gb
Ex db IIB T4 Gb
Class I, Division 1, Groups C and D, T4
Class I, Zone 1, AEx db IIB T4 Gb
Class I, Zone 1, Ex db IIB T4 Gb
-40°C≤T_{AMB}≤+60°C, IP6X TYPE 3R

OPTIONAL JUNCTION BOX

- Additional wiring option if needed

ServoChoke testing and simulation

Tolomatic's hydraulic simulator test stand allows ServoChoke to be tested to any conditions.

- Thermal chamber for -40 to +70°C ambient temperature testing
- Adjustable stem loading monitored by a load cell rated for 445 kN (100,000 lbf)
- Infinite modulating conditions for travel distance, & time between moves
- Use of motor feedback, servo drive, scope trace programs, and additional instrumentation monitors all performance aspects such as: position, accuracy, repeatability, and velocity

DATA COLLECTION & THERMAL TESTING

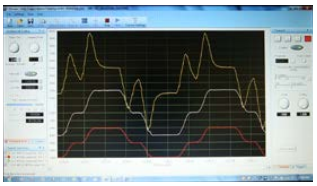

Our active hydraulic simulator has the ability to simulate many applications.

ServoChoke field testing with real world results

- ServoChoke has been successfully deployed on real world MPD jobs with highly favorable results
- In North America alone ServoChoke was field deployed at temperatures as low as -40°C (-40°F) and over 40°C (104°F) within the first year with no winterizing or thermal protection equipment used
- Not only in the lab but in the field, ServoChoke is proving to be a rugged, precise, and dependable part of an entire MPD service package

Lowest Total Cost of Ownership

- Designed for continuous operation for maximum reliability and uptime
- Increased speed can save time on connections
  - ◊ Up to 30 seconds per connection can save thousands per year in efficiency gains
- Elimination of maintenance frees up time to for other maintenance intensive equipment
- Avoiding just one stuck pipe incident with improved pressure control can be thousands in savings

ServoChoke® can further streamline processes by allowing quick & easy field replacement. Spare counts are minimized by using the same actuator across multiple choke applications. With global certifications, the same ServoChoke® actuator can be used worldwide.

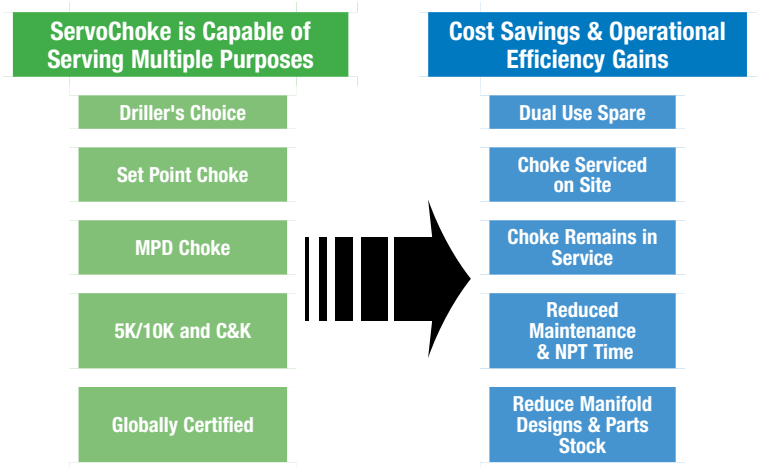

ServoChoke® Flow Loop Tested at PERTT Labs LSU

TESTS CONDUCTED:

- All done without drilling/MPD software
  - -Simple proportional control loop to command position
- Step response
  - -With and without the well bypassed
- Pump start-up and shut-down
- Two phase pressure control

Optimal Servo Drive System

- Safe reliable operation
- Pre-configured motor and feedback device
- Pre-tuned for a variety of forces/pressures and temperature ranges
- Current limits (Peak & RMS) preset to prevent actuator damage
- System tested to verify proper operation

Communication protocols

- Profinet
- EtherNet/IP
- Modbus TCP
- and more

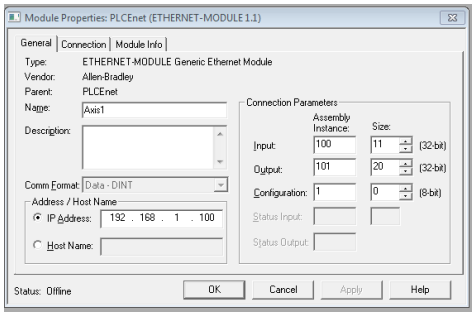

Digital & Analog I/O

- 4 - 20 mA
- 0 - 10 VDC

Note: Tolomatic does not supply cables, electrical panels, or other peripheral components for making connections in hazardous locations. Junctions boxes for the actuator supplied without cable glands available upon request.

Sucessful integration with other servo drives

SIEMENS

KOLLMORGEN

Because Motion Matters™

Parker

Rockwell Automation

ABB

Let Tolomatic bring ServoChoke® to you!

Tolomatic has built a self-contained controls package to operate ServoChoke for testing. Whether its your flow loop or one contracted for test, let Tolomatic show you the performance of ServoChoke.

We can coordinate the use of a choke valve or supply your own. From there we can connect to either 230 or 460 VAC three phase power and run ServoChoke through basic pressure adjustments and record actuator performance during this testing. Once testing is complete, Tolomatic will provide you with the recorded actuator data to bring back to your company and show others what ServoChoke can do for you.

ServoChoke® Electric Choke Valve Actuator

Performance & Mechanical Specifications:

SERIES : (Metric Units)		SVC07	SVC15
PEAK THRUST	N	31,138	66,724
MAX. VELOCITY	mm/sec	19.6	9.8
STROKE	mm	76.2 to 95.3	
TEMPERATURE RANGE	°C	-40 to +60	

SERIES: (U.S. Units)		SVC07	SVC15
PEAK THRUST	*lbf*	*7,000*	*15,000*
MAX. VELOCITY	*in/sec*	*0.77*	*0.386*
STROKE	*in*	*3.00 to 3.75*	
TEMPERATURE RANGE	*°F*	*-40 to +140*	

Motor / Feedback / Brake - Specifications:

	SERIES	SVC 7k	SVC 15k
PEAK SPEED	RPM	3,000	3,000
Kt (trap)	oz-in/amp DC	232.03	232.03
Kt (sine)	Nm/Arms	2.007	2.007
Ke	Vrms/krpm	121.34	121.34
RATED VOLTAGE	Vac	480	480
WINDING RESISTANCE	Ohms	2.0	2.0
INDUCTANCE	mH	12.2	12.2
MOTOR THERMAL TIME CONSTANT	minutes	108.0	108.0
RMS CURRENT	Amp	3.0	3.0
MAX. MOTOR TEMP	°F	302	302
	°C	150	150
NUMBER OF POLES		18	18
ROTOR INERTIA	lb-in^2	11.3	11.3
	kg-cm^2	33.0	33.0
BRAKE VOLTAGE	Vdc	24	24
BRAKE TYPE		Electric Release	Electric Release
BRAKE POWER REQUIREMENTS	Watts	16.0	16.0

All values are subject to change without notice. Based on final performance testing and design verification

FEEDBACK SIGNAL		Hiperface or SSI Sin-Cos	Hiperface or SSI Sin-Cos

All values are subject to change without notice. Based on final performance testing and design verification

ServoChoke® Electric Choke Valve Actuator

Dimensions

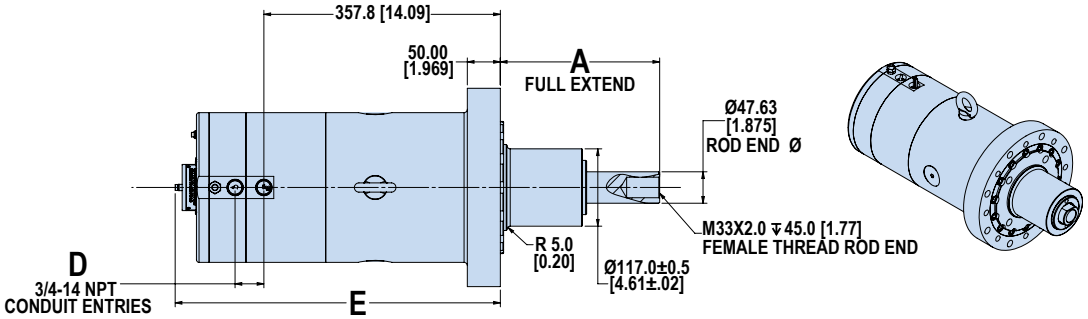

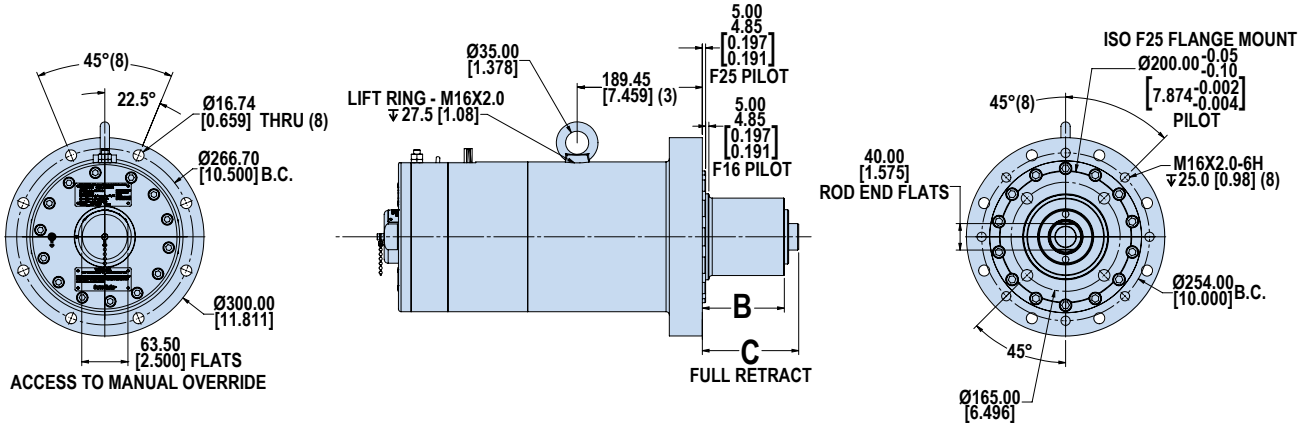

	SK 3.00	SK 3.75
A	202.9	241.0
B	104.9	123.9
C	126.7	145.7
	FBS_	FBB_
D	43.5	56.0
E	493	505

Dimensions in millimeters

	SK 3.00	SK 3.75
A	*7.99*	*9.49*
B	*4.13*	*4.88*
C	*4.99*	*5.74*
	FBS_	FBB_
D	*1.71*	*2.21*
E	*19.41*	*19.88*

Dimensions in inches

Ordering

ACTUATOR / MOTOR | **OPTION**

S V C 1 5 R N M 1 0 S K 3 · 0 0 F B B 1 H X 1 P T 1

MODEL & SCREW/NUT

SVC15 RNM10	15,000 lbf Peak Thrust
SVC07 RNM20	7,000 lbf Peak Thrust

STROKE LENGTH

Enter stroke length:

***SK 2.50**	2.50" (63.5 mm)
SK 3.00	3.00" (76.2 mm)
SK 3.75	3.75" (95.25 mm)

**Contact Tolomatic*

ENCODER

FBB1	Hiperface Sin/Cos
FBB2	SSI Sin/Cos
FBB3	Hiperface Sin/Cos - Rockwell Automation**

**Required for Rockwell Automation servo drives ONLY. Contact Tolomatic for details

OPTION

HX1	8 mm Female Hex

OPTION

***PT1**	Painted Exterior

** Contact Tolomatic for details*

JUNCTION BOX (SOLD SEPARATELY)

2607-9007	Hiperface
2607-9008	SSI Sin/Cos
2607-9011	Hiperface Paint Option
2607-9012	SSI Sin/Cos Paint Option

The Tolomatic Difference Expect More From the Industry Leader:

Unique linear actuator solutions with Endurance Technology℠ to solve your challenging application requirements.

The fastest delivery of catalog products... Built-to-order with configurable stroke lengths and flexible mounting options.

Online sizing that is easy to use, accurate and always up-to-date. Find a Tolomatic electric actuator to meet your requirements.

Match your motor with compatible mounting plates that ship with any Tolomatic electric actuator.

Easy to access CAD files available in the most popular formats to place directly into your assembly.

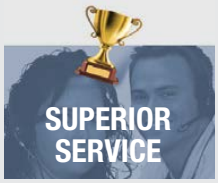

Our people make the difference! Expect prompt, courteous replies to all of your application and product questions.

Also Consider These Other Tolomatic Products:

Electric Products

Rod & Guided Rod Style Actuators, High Thrust Actuators, Screw & Belt Drive Rodless Actuators, Motors, Drives and Controllers

"Foldout" Brochure #9900-9074

Pneumatic Products

Rodless Cylinders: Band Cylinders, Cable Cylinders, Magnetically Coupled Cylinders/Slides; Guided Rod Cylinder Slides

"Foldout" Brochure #9900-9075

Power Transmission Products

Gearboxes: Float-A-Shaft®, Slide-Rite®; Disc Cone Clutch; Caliper Disc Brakes

"Foldout" Brochure #9900-9076

Tolomatic
EXCELLENCE *IN MOTION*®

COMPANY WITH QUALITY SYSTEM CERTIFIED BY DNV GL = ISO 9001 = Certified site: Hamel, MN

USA
3800 County Road 116
Hamel, MN 55340, USA
Phone: (763) 478-8000
Fax: (763) 478-8080
Toll-Free: **1-800-328-2174**
sales@tolomatic.com
www.tolomatic.com

CHINA
Tolomatic Automation Products (Suzhou) Co. Ltd.
(ServoWeld® inquiries only)
No. 60 Chuangye Street, Building 2
Huqiu District, SND Suzhou
Jiangsu 215011 - P.R. China
Phone: +86 (512) 6750-8506
Fax: +86 (512) 6750-8507
ServoWeldChina@tolomatic.com

EUROPE
Tolomatic Europe GmbH
Elisabethenstr. 20
65428 Rüsselsheim
Germany
Phone: +49 6142 17604-0
help@tolomatic.eu

Visit www.tolomatic.com for the most up-to-date technical information